इंटरनेट मानक

Disclosure to Promote the Right To Information

Whereas the Parliament of India has set out to provide a practical regime of right to information for citizens to secure access to information under the control of public authorities, in order to promote transparency and accountability in the working of every public authority, and whereas the attached publication of the Bureau of Indian Standards is of particular interest to the public, particularly disadvantaged communities and those engaged in the pursuit of education and knowledge, the attached public safety standard is made available to promote the timely dissemination of this information in an accurate manner to the public.

"जानने का अधिकार, जीने का अधिकार"
Mazdoor Kisan Shakti Sangathan
"The Right to Information, The Right to Live"

"पुराने को छोड नये के तरफ"
Jawaharlal Nehru
"Step Out From the Old to the New"

IS 9133 (1979): Trolley for General dical Store [MHD 12: Hospital Equipment]

"ज्ञान से एक नये भारत का निर्माण"
Satyanarayan Gangaram Pitroda
"Invent a New India Using Knowledge"

Act Number 22 of 2005
The Indian Parliament
RIGHT TO INFORMATION

Made Available By
Public.Resource.Org

"ज्ञान एक ऐसा खजाना है जो कभी चुराया नहीं जा सकता है"
Bhartṛhari—Nītiśatakam
"Knowledge is such a treasure which cannot be stolen"

BLANK PAGE

BRUTUM FULMEN

IGNORANTIA JURIS NON EXCUSAT

PROTECTED BY COPYRIGHT

UDC 615'478'32 : 684'442'6

(Reaffirmed 2001)

Indian Standard

SPECIFICATION FOR TROLLEY FOR GENERAL MEDICAL STORE

Hospital Equipments Sectional Committee, CPDC 14; Hospital Furniture Subcommittee CPDC 14:1 [Ref: Doc: CPDC 14 (1195)]

1. Scope — Dimensional and other requirements for trolley used for general medical store.

2. Material

2.1 Steel *Tube* — As given in **2.1 of IS** : 4033-1968 ' **General** requirements for hospital furniture '.

2.2 *Angles* — Mild steel.

2.3 *Castors* — Conforming to IS : 4034-1968 ' Specification for castors for hospital equipment '.

3. Shape and Dimensions-As shown in Fig. 1.

3.1 A **deviation of** ±10 mm shall be allowed on all major dimensions.

4. Manufacture

4.1 *Handle* — The handle shall be manufactured **from steel** tube **bent** and welded as shown in Fig. 1.

4.2 *Frame* — Shall be made from mild steel angles. The wire mesh, brackets for rubber and castor wheels shall be tack welded to the frame. Mild steel sheet in one piece shall be of 1'25 mm thickness and shall also be welded to the frame. When required by the purchaser, the wire netting shall have an arrangement on one side to open out through hinges and hooks.

5. **Workmanship**

5.1 All surfaces shall be well finished and smooth.

5.2 All welded joints shall have welds fully penetrating and shall be well finished.

5.3 All edges shall be rounded off.

6. **Finish** — As specified in 5 of IS : 4033-1668.

7. Tests

7.1 *Adhesion Test* — Carry out the test as prescribed in **6.1.1** of IS : 4033-1968.

7.2 ***Performance Test* —** Carry out the test as prescribed in **6.1.2** of IS : **4033-1968.** However, the performance shall be determined by putting a mass of 150 kg for larger and 100 kg for smaller **size** trolleys equally distributed at each corner.

8. **Marking** — The trolley shall have a name plate or label fixed to it showing the manufacturer? name, initials **or recognized** trade-mark.

8.1 *ISI Certification Marking* — Details available with the Indian Standards Institution.

9. Packing — As agreed to between the purchaser and the manufacturer.

Adopted 30 April 1979 | © October 1979, ISI | Price Rs 1.00 Gr 1

INDIAN STANDARDS INSTITUTION
MANAK BHAVAN, 9 BAHADUR SHAH ZAFAR MARG
NEW DELHI 110002

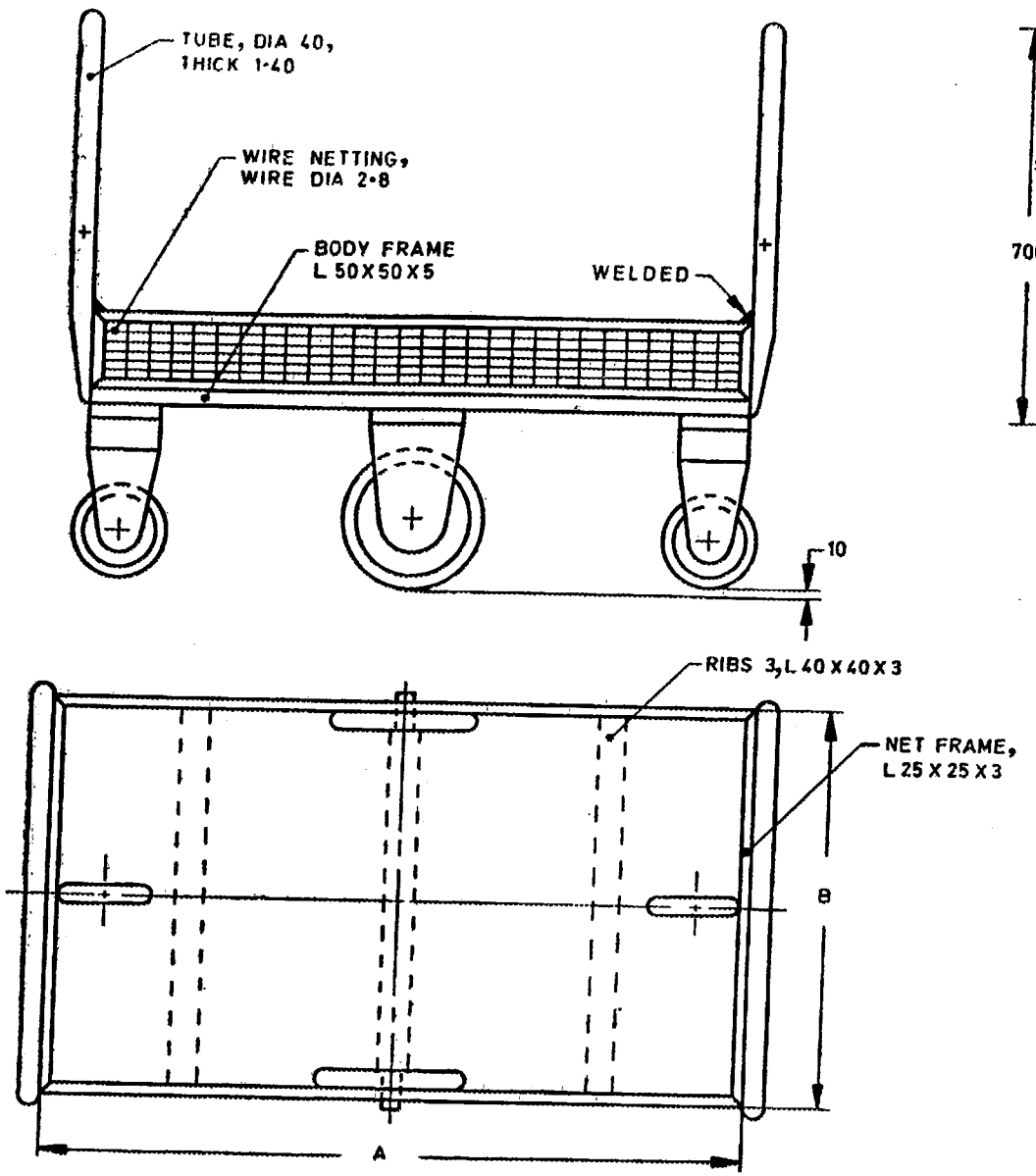

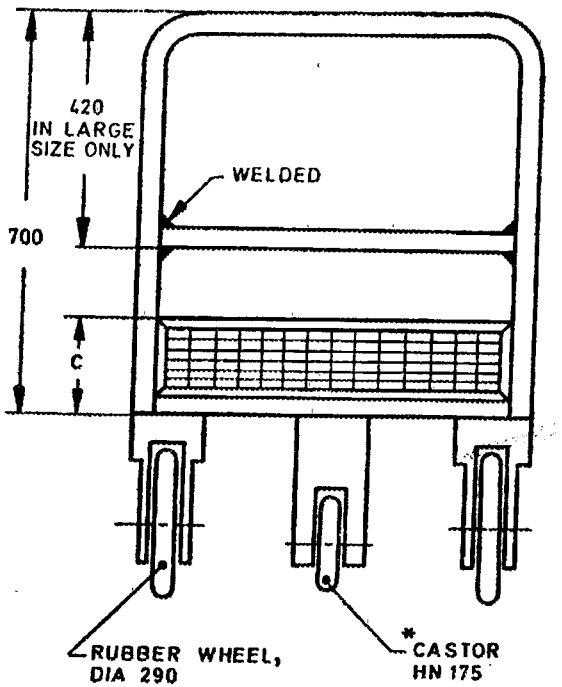

Size	*A*	*B*	*C*
Large	1 215	650	155
Small	900	600	450

*See IS : 4034-1979.

All dimensions in millimetres.

FIG. 1 TROLLEY FOR GENERAL MEDICAL STORE

Printed at Neelkamal Printers, Delhi, India